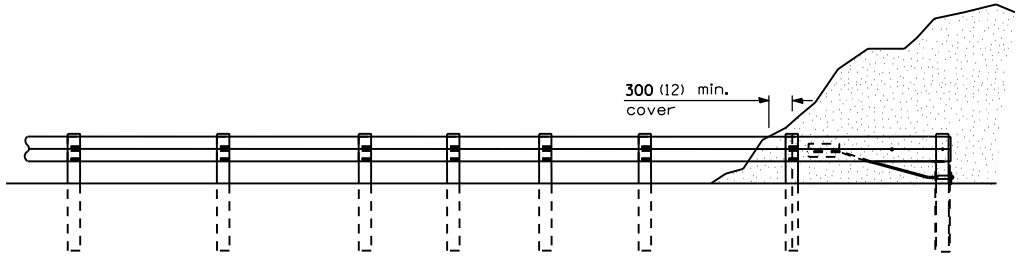

ELEVATION

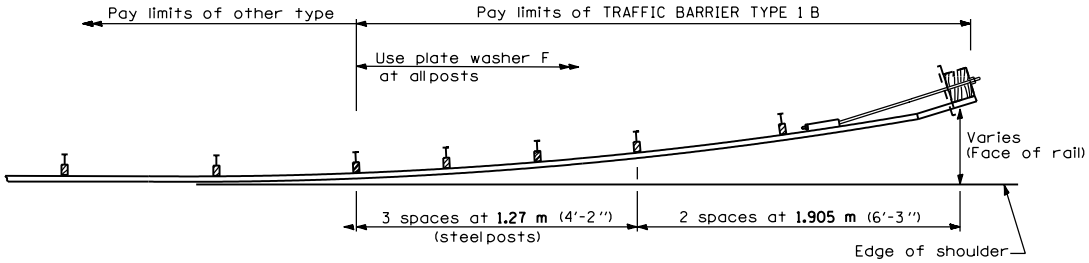

PLAN

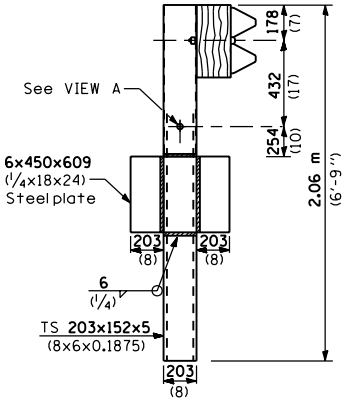

STEEL TUBE & SOIL PLATE

(1 ea.)

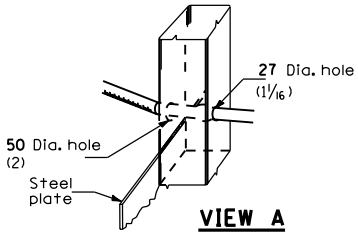

VIEW A

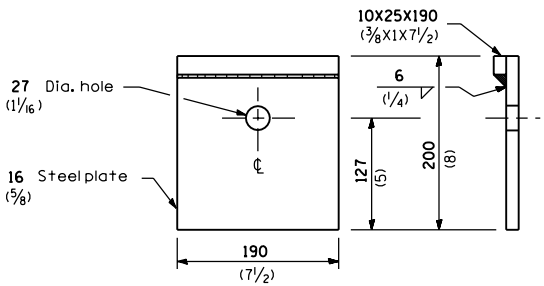

BEARING PLATE K

(1 ea.)

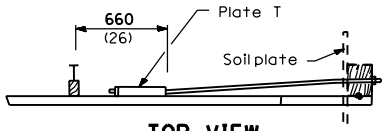

TOP VIEW

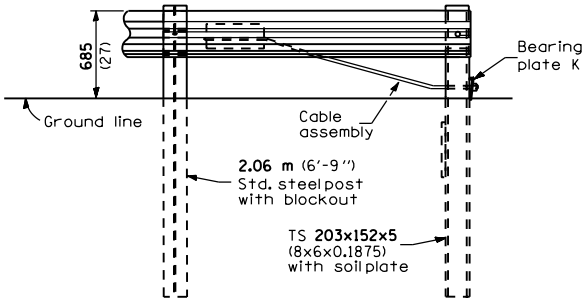

TRAFFIC BARRIER TERMINAL

GENERAL NOTES

See Standard 630001 for details of guardrail not shown.

All dimensions are in millimeters (inches) unless otherwise shown.

Illinois Department of Transportation

PASSED January 1, 2001
Roger Driskell
ENGINEER OF POLICY AND PROCEDURES

APPROVED January 1, 2001
Michael J. Hine
ENGINEER OF DESIGN AND ENVIRONMENT

ISSUED 1-1-97

DATE	REVISIONS
1-1-01	Insert blockout into
	cross-section view.
1-1-00	Del. Plate A

TRAFFIC BARRIER TERMINAL TYPE 1B

STANDARD 631006-03