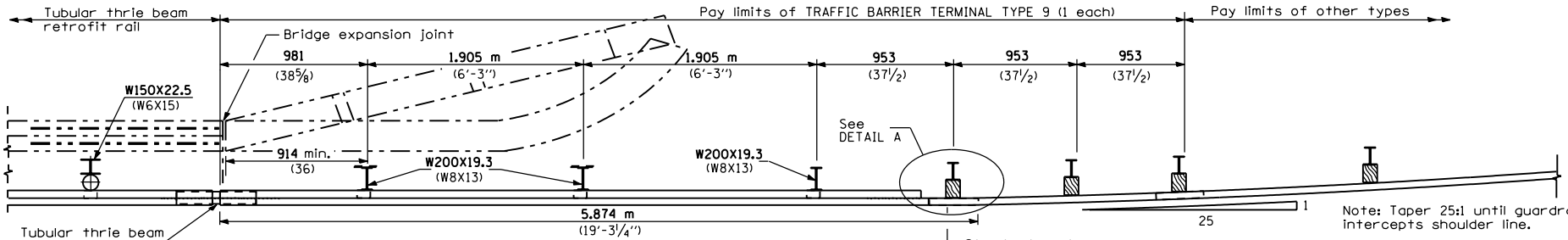

PLAN

(Bridge with expansion joint shown)

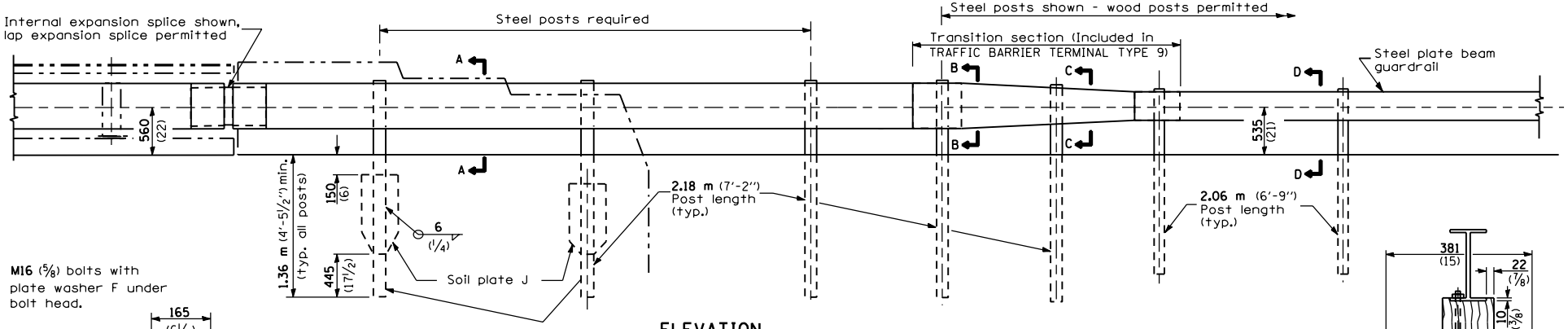

ELEVATION

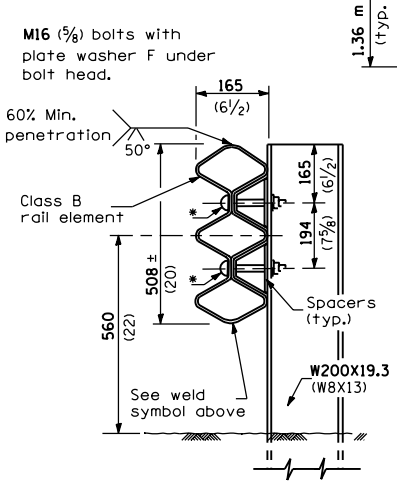

SECTION A-A

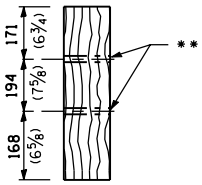

SECTION B-B

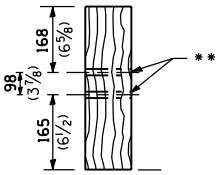

SECTION C-C

DETAILS of BLOCK-OUTS

** ℄ 19 (3/4) Dia. hole

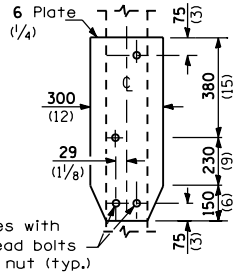

SOIL PLATE J & ALTERNATE CONNECTION DETAILS

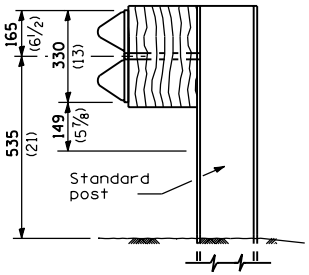

SECTION D-D

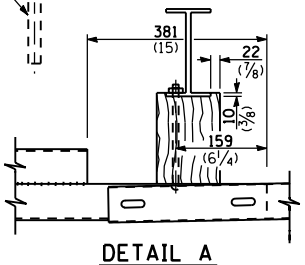

DETAIL A

GENERAL NOTES

See Standards 509001 and 630001 for details of guardrail elements not shown.

The type 9 terminal shall be installed after the posts for the bridge retrofit rail have been located as shown on Standard 509001.

All dimensions are in millimeters (inches) unless otherwise shown.

Illinois Department of Transportation

PASSED October 1, 1998
ENGINEER OF POLICY AND PROCEDURES

APPROVED October 1, 1998
ENGINEER OF DESIGN AND ENVIRONMENT

ISSUED 1-1-97

DATE	REVISIONS
10-1-98	Revised to wooden
	block-outs.
1-1-97	Renum. Standard 2346-4.

TRAFFIC BARRIER TERMINAL TYPE 9

STANDARD 631041-01